SmartSwitch DC4

4 Channel DC Switch

ENERGY SOLUTIONS
Efficient Sustainable Electrification

Key Features:

- 12V or 24VDC operation
- CAN bus controlled
- 4 channels providing load control, Lamp dimming and digital sensing
- User definable current limiting
- Thermal overload protection
- Control and indication of outputs on module

victron energy
BLUE POWER
Victron Ready

Part Number:
SMARTSWITCH-DC4

General Description

The module is a configurable 4 channel DC load controller. With internally powered and isolated CAN interface.

All four channels having the same following functions:

Configurable to one of the following modes

- Latched - (on/off) output. On state output voltage will track module Supply voltage.
- Momentary - Active only while button pressed.
- Dimming - Lamp dimming by 120Hz pulse width modulation.

Current monitoring capable of a full-scale current of 30A

Output protection with

- Over current by configurable fuse rating of 2A, 3A and 5A. With each rating providing simulated characteristics of the equivalent ATO fuse. (i.e. Trip in less 100mS if current > 35A and 100 S if current is 2 times fuse rating)
- Over temperature - Module and local to channel driver

Voltage sensing of output connections allowing monitoring of output and digital input. With possibility of future upgrade of analogue voltage measurement.

Can interface implementing: -

- J1939/NMEA2000 address claim
- Transmission of supported Tx, Rx PGN

Flammability: - PCB & enclosure UL94V-0

Weight: - 170g with connectors

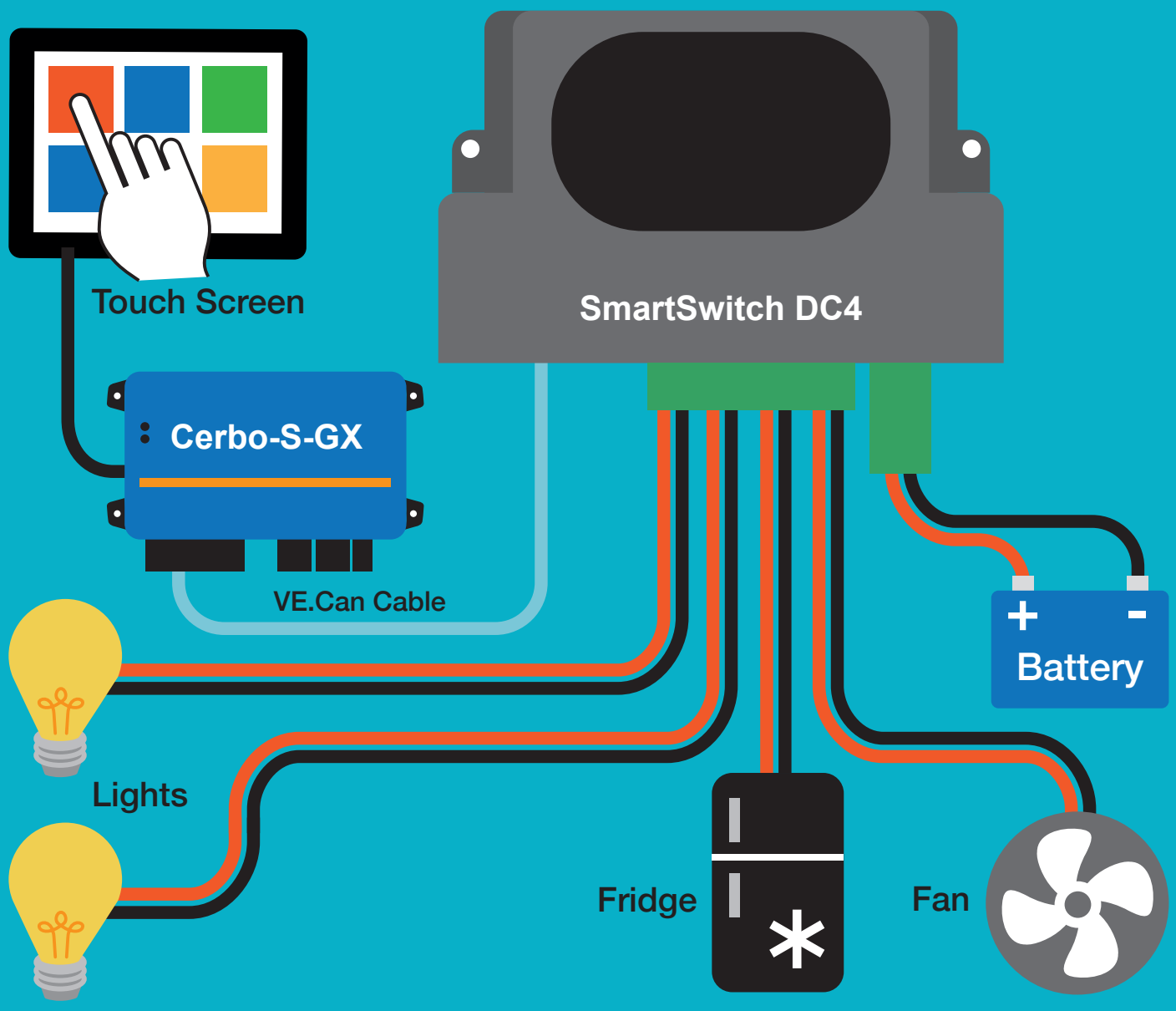

Connections

(A) CAN

2 x RJ45 connectors allowing CAN loop through or terminate.

VE.CAN compliant pin out

(B) Output

4 x channel pairs (See diagram for polarity)

(C) DC Power

Module input supply (See diagram for polarity)

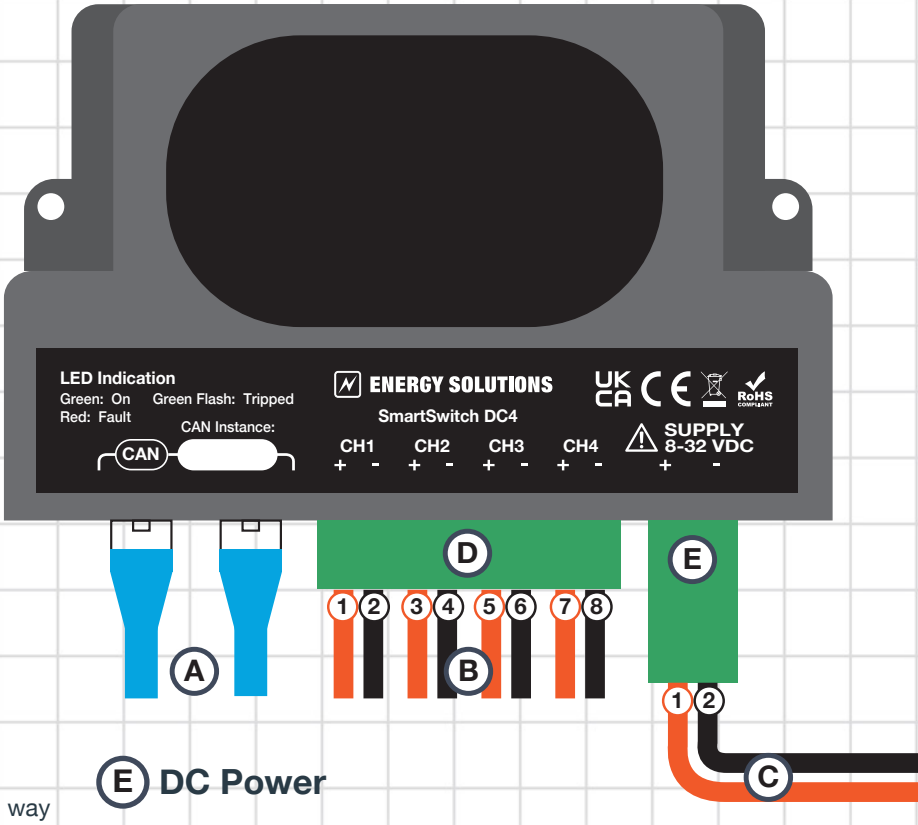

Connectors

(D) Output

Pluggable terminal block, 5.08mm supplied with 2 x 4 way but will support single 8 way or a 2 way for each channel.

Connector wire data

Solid min 0.2mm² max 2.5mm²
Flexible min 0.2mm² max 2.5mm²
Flexible with ferrule min 0.25mm² max 2.5mm²

(E) DC Power

Pluggable terminal block, 7.62mm supplied.

Connector wire data

Solid min 0.2mm² max 6mm²
Flexible min 0.2mm² max 4mm²
Flexible with ferrule min 0.25mm² max 4mm²

Maximum Ratings

PARAMETER	MIN	MAX	UNIT
Supply voltage	-0.5	33	V
Supply current	-	20A	A
Ambient temperature	-20	60	°C
Humidity (non-condensing)	0	95	%
Storage temperature	-40	85	°C
Max continuous output current per channel Total current from all channels limited by an internal 15A ATO fuse.	-	5	A
Input terminal voltage on any channel Voltages outside this will cause protection currents to flow see "… channel input current". positive is the direction of normal output current and back EMF current. If an output load is also supplied by another source a diode should be placed between the load and channel positive output to prevent other source reverse feeding the module supply if the supply to the module fails. We can supply an 821BD for this.	-0.3	Vs + 0.3	V
Channel on - Average channel input current	-1	-	A
Channel off - Max average channel input current	-0.5	0.3	A
Channel off - Max channel input current t <100mS	-	8	A
Max output fault short current	-	50	A
Maximum flyback energy in PWM mode (E) To limit heating in module the load inductance should be limited to L = 2 x E/I2 unless an external flyback diode is used I.E. L max @2A = 1.25mH	-	2.5	mJ

Operational Characteristics

(Temperature range -10ºC to 50ºC)

PARAMETER	MIN	TYPICAL	MAX	UNIT
Supply voltage - DC loads operational	8	-	32	V
Supply voltage - Control functions and CAN communication only	6	-	32	V
Supply current - No load @12V	-	50mA	70mA	A
Supply current	0	-	15A	A
CPU warning temperature	-	75	-	ºC
CPU temperature fault (On fault all output turned off)	-	80	-	ºC
Channel driver warning temperature	-	75	-	ºC
Channel driver fault temperature	-	90	-	ºC
Channel driver fault recovery temperature	-	75	-	ºC
Maximum load inductance in PWM mode (2A fuse)	-	1	-	mH
Maximum load inductance in PWM mode (5A fuse)	-	200	-	µH
Channel on output voltage **Iout = 5A Vs = Module input terminal voltage**	-	Vs - 0.1	Vs	V
Channel output on threshold voltage	-	8	-	V
Input active high on threshold	-	4	-	V
Input active high off threshold	-	-1	-	V
Input active low on threshold	-	2	-	V
Input active low off threshold	-	1	-	V
Maximum external switch resistance in active low input mode	-	400	-	ohms
Active low pull up current	-	4mA	-	-
Active low open circuit voltage	-	Vs-0.2	Vs	V

Standards

EN61000-6-1-2019 - Generic standards - Immunity standard for residential, commercial and light-industrial environments

EN60000-6-3 A1 Generic standards - Emission standard for residential, commercial and light-industrial environments

EN60945:2002 Section 8 & 9 - Maritime navigation and radio communication equipment and systems - General requirements

ENERGY SOLUTIONS
Efficient Sustainable Electrification

tel: +44 (0)1634 290772 **email:** sales@energy-solutions.co.uk
www.energy-solutions.co.uk

Energy Solutions UK Ltd, Broadmead House, Bellingham Way,
Aylesford, Kent, ME20 6XS

Images are for illustrative purposes only and actual products and examples may differ from those shown. All details correct at time of going to press but subject to change. E & EO. Version: September 2024