TS4-A-F/2F with Rapid Shutdown System (RSS) Transmitters

Installation Manual

Visit the Tigo Energy Help Center for comprehensive videos, articles, and other resources for all Tigo products.

Disclaimer of Warranties and Limitation of Liability

The information, recommendations, descriptions, and safety disclosures in this document are based on Tigo Energy, Inc.'s ("Tigo") experience and judgment and may not cover all contingencies. If further information is required, consult a Tigo representative. Sale of the product shown in this document is subject to the terms and conditions outlined in Tigo's Limited Warranty, Terms and Conditions, and any other contractual agreements between Tigo and the purchaser.

THERE ARE NO UNDERSTANDINGS, AGREEMENTS, WARRANTIES, EXPRESSED OR IMPLIED, INCLUDING WARRANTIES OF FITNESS FOR A PARTICULAR PURPOSE OR MERCHANTABILITY, OTHER THAN THOSE SPECIFICALLY SET OUT IN ANY EXISTING CONTRACT BETWEEN THE PARTIES. ANY SUCH CONTRACT STATES THE ENTIRE OBLIGATION OF TIGO. THE CONTENTS OF THIS DOCUMENT SHALL NOT BECOME PART OF, OR MODIFY ANY CONTRACT BETWEEN, THE PARTIES.

In no event will Tigo be responsible to the purchaser or user in contract, in tort (including negligence), strict liability or otherwise for any special, indirect, incidental, exemplary, reliance or consequential damage or loss whatsoever, including but not limited to injury to persons, damage or loss of use of property, equipment or power systems, loss of profit, cost of capital, loss of power, additional expenses in the use of existing power facilities, or claims against the purchaser or user by its customers resulting from the use of the information, recommendations and descriptions contained herein. The information contained in this document is subject to change in Tigo's sole discretion and without notice.

Document Revision History

Version	Date	Changes
1.0	n/a	Initial version
2.0	20221020	Added RSS Tx PST content and updated TS4 offerings
3.0	20230120	Complete reformatting, all topics updated
3.1	20230216	Added certification statement and corrected TS4-A-2F voltage error (p. 18)
4.0	20230922	Changed title, added Document Revision History (front matter), removed legacy (pre-PST) transmitter content, added commissioning, testing, and troubleshooting content and Crosstalk appendix.

Contents

Overview 1
This Manual 1
Important Safety Instructions 2
PV Conductor Layout and RSS Signal Integrity 5
Required Practices 5
Install TS4s 6
Install Transmitters 10
Install an Enclosure 10
Connect Power Supplies 12
Connect a Core 14
Connect Two Cores 15
Connect Signal Wiring 16
Transmitter Status LEDs 16
Testing and Troubleshooting 17
Measurements Table Preparation 17
Unpowered String Measurements – Safety Voltage 18
Test Safety Voltages 18
Resolve Safety Voltage Errors 18
Powered String Measurements 19
Measure Open Circuit Voltage (V_{OC}) 19
Resolve V_{OC} Errors 20
Test Current Direction 21
Resolve Current Direction Errors 21
Crosstalk Measurements 22
Test for Crosstalk 22
Resolve Crosstalk Problems 24
Resolve Transmitter Errors 24
RSS Signal Detection 25
Commissioning Checklist 26
Energize RSS Transmitters 26
De-Energize RSS Transmitters 27
Partial Site Shutdown 27

Specifications 28
Warranty 28
Support 28
Appendix A – Crosstalk 29
What Is Crosstalk? 29
What Causes Crosstalk? 29

Overview

Tigo TS4-A-F/2F MLPE and RSS transmitter components enable a UL-certified and NEC-compliant PV rapid shutdown system (PVRSS) for new and existing PV systems. Upon shutdown, the components, applicable for residential through large commercial systems, reduce voltage to 0.6 V per TS4 resulting in a string voltage of less than 30 V.

- A TS4-A-F can control power production from one module while a TS4-A-2F controls two modules. They are otherwise identical in function and may be used interchangeably in a string.
- The TS4-A-F/2Fs rely on a continuous power-line communication (PLC) keep-alive signal from an RSS transmitter to enable module output. Upon signal loss, module and string voltages drop to safe levels.

This Manual

This manual provides instructions for installing, testing, troubleshooting, and commissioning the following Tigo components of a rapid shutdown system:

- TS4-A-F
- TS4-A-2F
- RSS transmitter (with PST, part numbers 490-00000-51/52)

These safety symbols may appear in the manual:

A hazardous situation which could result in serious injury or loss of life.

A hazardous situation which could result in injury or damage to the product.

An important operational note.

IMPORTANT SAFETY INSTRUCTIONS

LETHAL VOLTAGE MAY BE PRESENT IN ANY PV INSTALLATION

SAVE THESE INSTRUCTIONS

WARNING - THIS PHOTOVOLTAIC RAPID SHUTDOWN EQUIPMENT (PVRSE) DOES NOT PERFORM ALL OF THE FUNCTIONS OF A COMPLETE PHOTOVOLTAIC RAPID SHUTDOWN SYSTEM (PVRSS). THIS PVRSE MUST BE INSTALLED WITH OTHER EQUIPMENT TO FORM A COMPLETE PVRSS THAT MEETS THE REQUIREMENTS OF NEC (NFPA 70) SECTION 690.12 FOR CONTROLLED CONDUCTORS OUTSIDE THE ARRAY. OTHER EQUIPMENT INSTALLED IN OR ON THIS PV SYSTEM MAY ADVERSELY AFFECT THE OPERATION OF THE PVRSS. IT IS THE RESPONSIBILITY OF THE INSTALLER TO ENSURE THAT THE COMPLETED PV SYSTEM MEETS THE RAPID SHUTDOWN FUNCTIONAL REQUIREMENTS. THIS EQUIPMENT MUST BE INSTALLED ACCORDING TO THE MANUFACTURER'S INSTALLATION INSTRUCTIONS.

- This manual contains important instructions for installation and maintenance of the Tigo product models TS4-F, TS4-A-F, TS4-A-2F, and the RSS transmitter.
- Risk of electric shock: do not remove cover, disassemble, or repair. There are no user serviceable parts inside. Refer servicing to qualified service personnel.
- Before installing or using the Tigo System, please read all instructions and warning markings on the Tigo products, appropriate sections of your inverter manual, photovoltaic (PV) module installation manual, and other available safety guides.
- All equipment shall be installed and operated in an environment within the ratings and limitations of the equipment as published in the installation manual.
- To reduce risk of fire and shock hazard, install this device with strict adherence to National Electric Code (NEC) ANSI/NFPA 70 and/or local electrical codes. When the photovoltaic array is exposed to light, it supplies a DC voltage to the Tigo TS4 units and the output voltage may be as high as the PV module open circuit voltage (V_{OC}) when connected to the module. The installer should use the same caution when handling electrical cables from a PV module with or without the TS4 units attached.
- TS4-A-F and TS4-A-2F products are shipped in the OFF position and will measure 0.6V at the output when the keep-alive signal is not present.
- Installation must be performed by trained professionals only. Tigo does not assume liability for loss or damage resulting from improper handling, installation, or misuse of products.
- Remove all metallic jewelry prior to installing the Tigo TS4 units to reduce the risk of contacting live circuitry. Do not attempt to install in inclement weather.
- Do not operate the Tigo TS4 units if they have been physically damaged. Check existing cables and connectors, ensuring they are in good condition and appropriate in rating. Do not operate Tigo TS4 units with damaged or substandard wiring or connectors. Tigo TS4 units must be mounted on the high end of the PV module backsheet or racking system, and in any case above ground.

- Do not connect or disconnect under load. Turning off the inverter and/or the Tigo products may not reduce this risk. Internal capacitors within the inverter can remain charged for several minutes after disconnecting all power sources. Verify capacitors have discharged by measuring voltage across inverter terminals prior to disconnecting wiring if service is required. Wait 30 seconds after rapid shutdown activation before disconnecting DC cables or turning off DC disconnect.
- Connectors from different manufacturers cannot be mated with each other.
- The transmitter control power supply MUST be on the same AC branch circuit as the inverter to meet rapid shutdown requirements.

CONSIGNES DE SÉCURITÉ IMPORTANTES

UNE TENSION MORTELLE PEUT ÊTRE PRÉSENTE DANS TOUTE INSTALLATION PV

CONSERVEZ CES INSTRUCTIONS

AVERTISSEMENT - CET ÉQUIPEMENT D'ARRÊT RAPIDE PHOTOVOLTAÏQUE (PVRSE) N'EXÉCUTE PAS TOUTES LES FONCTIONS D'UN SYSTÈME D'ARRÊT RAPIDE PHOTOVOLTAÏQUE COMPLET (PVRSS). CE PVRSE DOIT ÊTRE INSTALLÉ AVEC D'AUTRES ÉQUIPEMENTS POUR FORMER UN PVRSS COMPLET QUI RÉPOND AUX EXIGENCES DE LA SECTION 690.12 DE NEC (NFPA 70) POUR LES CONDUCTEURS CONTRÔLÉS EN DEHORS DU SYSTÈME. D'AUTRES ÉQUIPEMENTS INSTALLÉS DANS OU SUR CE SYSTÈME PV PEUVENT AFFECTER LE FONCTIONNEMENT DU PVRSS. IL EST DE LA RESPONSABILITÉ DE L'INSTALLATEUR DE S'ASSURER QUE LE SYSTÈME PV TERMINÉ RÉPOND AUX EXIGENCES FONCTIONNELLES D'ARRÊT RAPIDE. CET ÉQUIPEMENT DOIT ÊTRE INSTALLÉ SELON LES INSTRUCTIONS D'INSTALLATION DU FABRICANT.

- Ce manuel contient des instructions importantes pour l'installation et la maintenance des modèles de produits Tigo TS4-F, TS4-A-F, TS4-A-2F et du transmetteur RSS.
- Risque de choc électrique, ne retirez pas le couvercle, ne démontez pas et ne réparez pas, aucune pièce réparable par l'utilisateur à l'intérieur. Confiez l'entretien à du personnel d'entretien qualifié.
- Avant d'installer ou d'utiliser le système Tigo, veuillez lire toutes les instructions et les avertissements sur les produits Tigo, les sections appropriées du manuel de votre onduleur, le manuel d'installation du module photovoltaïque (PV) et les autres guides de sécurité disponibles.
- Tout l'équipement doit être installé et utilisé dans un environnement respectant les valeurs nominales et les limites de l'équipement telles que publiées dans le manuel d'installation.
- Pour réduire les risques d'incendie et d'électrocution, installez cet appareil en respectant strictement le Code national de l'électricité (NEC) ANSI/NFPA 70 et/ou les codes électriques locaux. Lorsque le générateur photovoltaïque est exposé à la lumière, il fournit une tension continue aux unités Tigo TS4 et la tension de sortie peut être aussi élevée que la tension de

circuit ouvert (V_{OC}) du module PV lorsqu'il est connecté au module. L'installateur doit faire preuve de la même prudence lors de la manipulation des câbles électriques d'un module PV avec ou sans les unités TS4 attachées.

- TS4-A-F et TS4-A-2F sont expédiés en position OFF et mesureront 0,6 V à la sortie lorsque le signal d'entretien n'est pas présent.
- L'installation doit être effectuée uniquement par des professionnels qualifiés. Tigo n'assume aucune responsabilité pour les pertes ou dommages résultant d'une mauvaise manipulation, installation ou mauvaise utilisation des produits.
- Retirez tous les bijoux métalliques avant d'installer les unités Tigo TS4 pour réduire le risque de contact avec les circuits sous tension. N'essayez pas d'installer par mauvais temps.
- N'utilisez pas les unités Tigo TS4 si elles ont été physiquement endommagées. Vérifiez les câbles et les connecteurs existants, en vous assurant qu'ils sont en bon état et qu'ils sont appropriés. Ne faites pas fonctionner les unités Tigo TS4 avec un câblage ou des connecteurs endommagés ou de qualité inférieure. Les unités Tigo TS4 doivent être montées sur l'extrémité supérieure de la feuille de fond du module PV ou du système de rayonnage, et dans tous les cas au-dessus du sol.
- Ne pas connecter ou déconnecter sous charge. L'arrêt de l'onduleur et/ou des produits Tigo peut ne pas réduire ce risque. Les condensateurs internes de l'onduleur peuvent rester chargés pendant plusieurs minutes après avoir déconnecté toutes les sources d'alimentation. Vérifiez que les condensateurs se sont déchargés en mesurant la tension aux bornes de l'onduleur avant de déconnecter le câblage si un entretien est nécessaire. Attendez 30 secondes après l'activation de l'arrêt rapide avant de débrancher les câbles CC ou de désactiver la déconnexion CC.
- Les connecteurs homologues de différents fabricants ne peuvent pas être accouplés les uns aux autres.
- L'alimentation de commande de l'émetteur DOIT être sur le même circuit de dérivation CA que l'onduleur pour répondre aux exigences d'arrêt rapide.

PV Conductor Layout and RSS Signal Integrity

Tigo RSS transmitters use power-line communications (PLC) over PV conductors to communicate with TS4-A-F/2Fs. Electromagnetic interference (crosstalk) from improper PV conductor layouts can compromise RSS signal integrity and result in TS4-A-F/2Fs being turned off or on inappropriately.

Tigo RSS transmitters must be installed in accordance with the following required practices. Failure to apply required practices may result in system failure causing equipment and infrastructure damage.

Required Practices

To maintain RSS signal strength and integrity:

- Limit the round-trip (positive-to-negative) length of a PV conductor to 300 m (985 ft.). Runs up to 500 m (1640 ft.) may be possible using two cores – contact Tigo Sales Engineering.
- Do not cross current-carrying conductors over any PV conductor used in the RSS.
- Run all conductors that use the same transmitter together in one conduit.

- Maintain at least 20 cm (8 in.) between conductors that use different transmitters.
- Keep individual +/– conductors within 25 mm (1 in.) of one another except when the negative conductor passes through a core.

- Use separate cable trays for conductors using different transmitters with a minimum 20 cm (8 in.) spacing between trays. Open cable trays do not protect signals from crosstalk.
- Trim excess home run conductors such as spools or piles of cable to avoid crosstalk.

Install TS4s

TS4-A-F and TS4-A-2F devices have identical functionality, however the TS4-A-F controls one solar module while TS4-A-2F controls two modules. Each module in a string must have its own TS4-A-F or share a TS4-A-2F with another module. You may connect a TS4-A-2F to a single module if needed by connecting the unused second set of input cables.

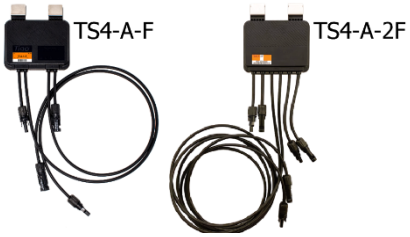

- Do not install TS4s if they have been physically damaged or with damaged or substandard wiring or connectors.
- Do not connect or disconnect TS4s under load.
- Do not apply an external voltage source to a module/string equipped with TS4s.

TS4s mount directly onto module frames with spring clips. If using frameless modules, remove the clips and bolt the TS4 directly to the PV rail with M8 bolts and torque to 10.2 Nm.

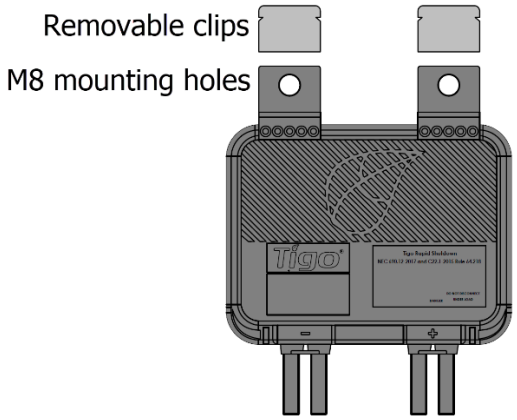

To install a TS4-A-F:

1. Attach the TS4 to the top portion of the solar module frame with the cable glands facing down. The TS4 and its cables, cable glands (where the cable enters the TS4), and connectors must not touch the roof surface.

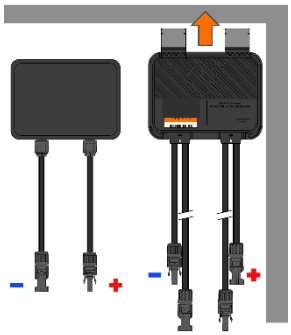

   - If frame thickness is ≤35 mm (1.4 in.), install the TS4 with the label facing the solar module.

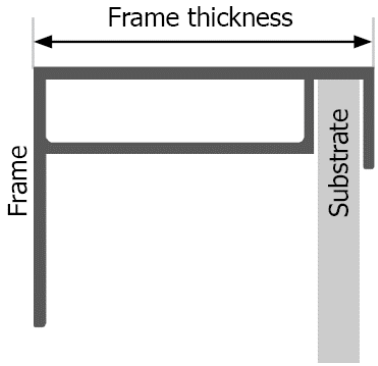

   - For adequate ventilation, no portion of the TS4 may be ≤12.7 mm (.5 in.) from the solar module substrate.
   - Check solar module instructions for restrictions on mounting devices under the module.

2. Connect the shorter TS4 input leads to the solar module.

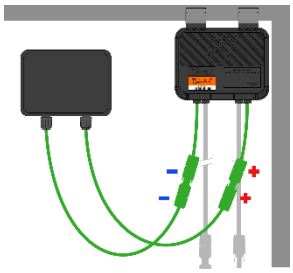

You must connect the shorter TS4 input leads to the solar modules before connecting to neighboring TS4s. Failure to do so can damage the TS4 units.

3. Connect the longer set of TS4 output cables to the neighboring TS4 to create a string.

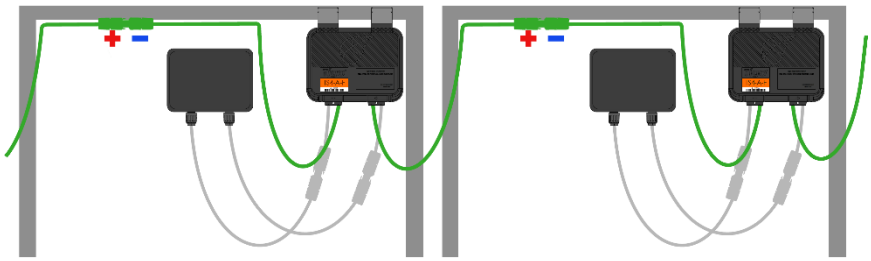

To install a TS4-A-2F:

1. Attach a TS4-A-2F to the top of a solar module frame with the cable glands facing down. The TS4 and its cables, cable glands, and connectors must not touch a roof surface.
   - If frame thickness is ≤35 mm (1.4 in.), install the TS4 with the label facing the solar module.

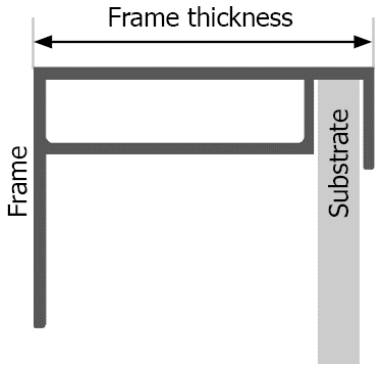

   - No portion of the TS4 may be ≤12.7 mm (.5 in.) from the module substrate.
   - Check solar module instructions for restrictions on mounting devices under the module.
2. Connect the shorter TS4 input leads to two solar modules.

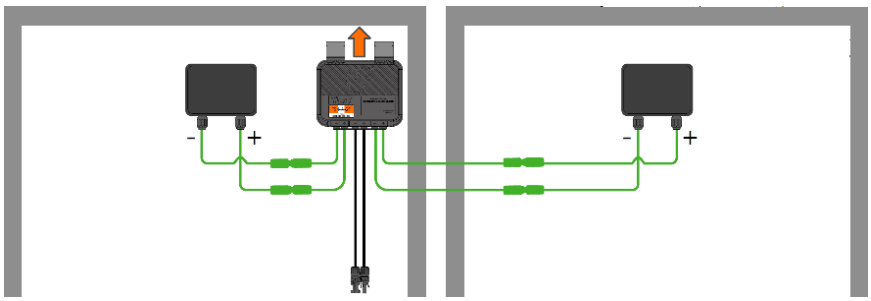

You must connect the shorter TS4 input leads to the solar modules before connecting to neighboring TS4s. Failure to do so can damage the TS4 units.

3. Connect the longer set of TS4 output cables to the next TS4-A-2F in the string.

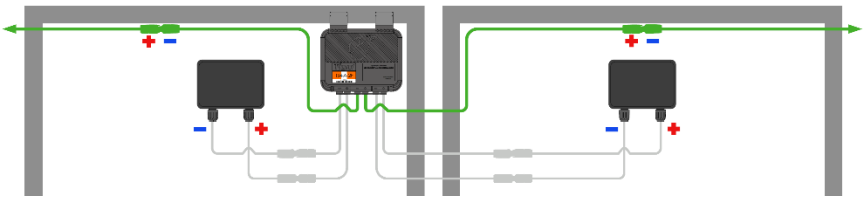

4. If connecting a TS4-A-2F to a single solar module, connect the unused second set of input cables.

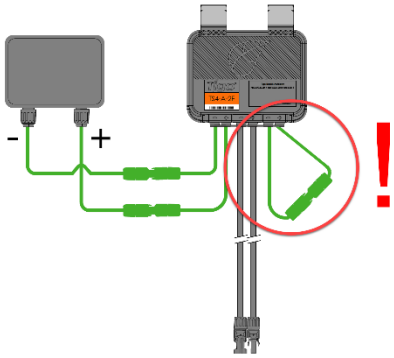

To disconnect a TS4:

- Activate rapid shutdown by turning off the RSS transmitter and inverter or by using the designated PV rapid shutdown system (PVRSS) initiator.
- Wait 30 seconds after a rapid shutdown activation before disconnecting DC cables.
- Disconnect individual TS4 cables to a string before disconnecting the TS4 input cables from the solar module junction box.

Always assume that TS4 units are in an ON state.

Install Transmitters

An RSS transmitter:

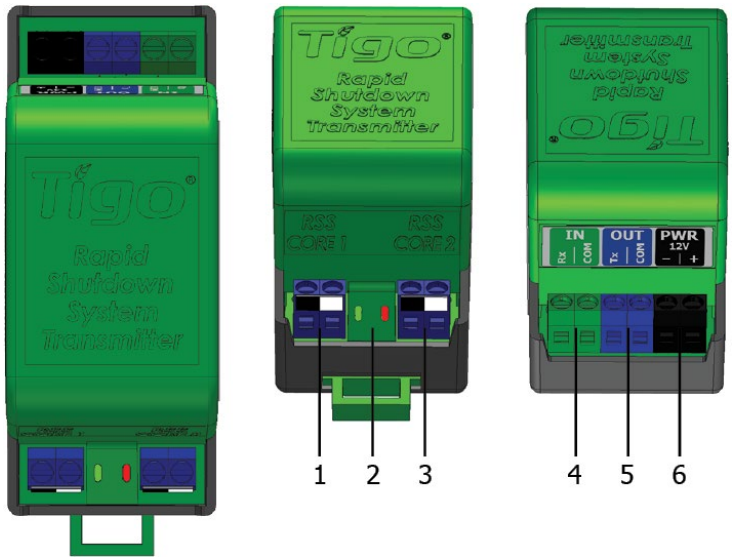

1. Core 1 terminals
2. Signal status LEDs
3. Core 2 terminals
4. IN Rx/COM receive terminals
5. OUT Tx/COM transmit terminals
6. Power (– and +12 V) terminals

To install one or more RSS transmitters, you will:

- Install an Enclosure (optional)
- Connect a Power Supply
- Connect a Core
- Connect Signal Wiring

Install an Enclosure

Transmitters are NEMA 1 (indoor) rated and require an enclosure with a 35 mm DIN rail and 12 V power supply. Tigo kits include NEMA 4-rated enclosures, transmitters, and power supplies.

- Transmitter power supplies must be installed on the same AC branch circuit as the inverter.
- Multiple-transmitter systems will require conduit for signal conductors between transmitters.

After installing TS4s and transmitters, place an RSS label within 1 m (3 ft.) of the RSS initiator (Refer to NEC 690.12(C)).

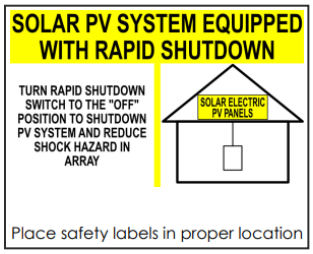

If installing a Tigo enclosure, use the diagrams below for locating conduit openings.

For 21 mm (0.75 in.) conduit:

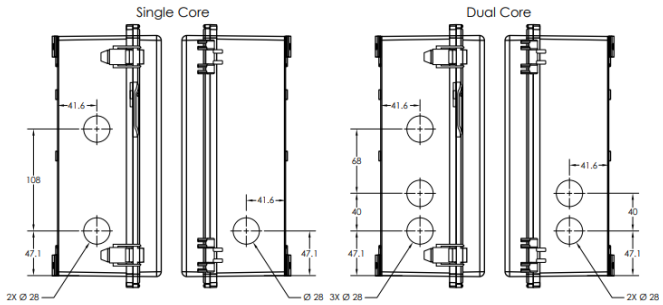

For 27 mm (1 in.) conduit:

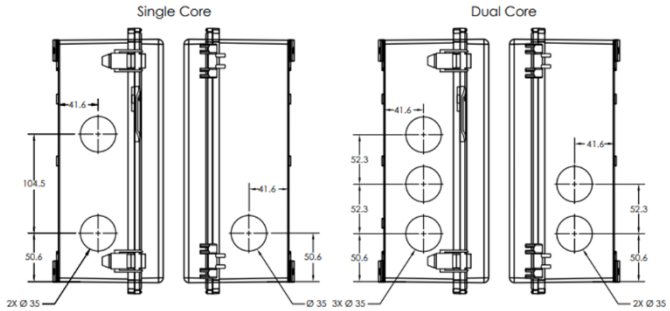

Connect Power Supplies

You may use one standard, 100-240 V 12 V/1 A power supply per transmitter or connect one commercial, 180-550 V/10 A power supply to up to ten transmitters with parallel connections.

All transmitters in a group should be energized and de-energized at the same time. One way to do this is to install a single AC breaker that powers all the transmitter group power supplies.

To connect a standard 100-240 V 12 V/1 A power supply to a transmitter:

1. Turn off all AC power sources.
2. Connect a ground wire to the power supply V– output terminal.

   Tigo power supplies include a DIN rail ground.
3. Connect AC conductors.
4. Use ferruled leads to connect 12 V output to the transmitter PWR terminals.

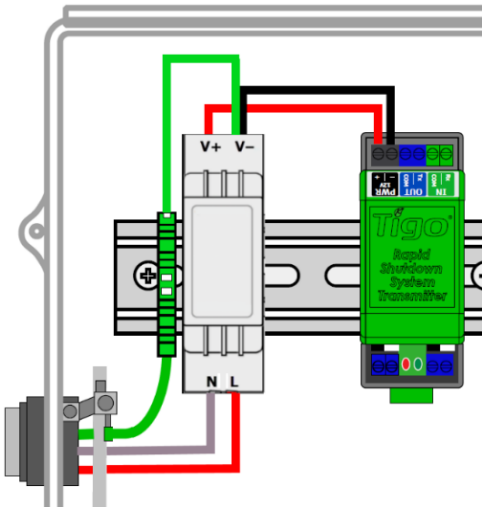

To connect a commercial 180-550 V/10 A power supply to a transmitter:

1. Turn off all AC power sources.
2. Connect ground, L2, and L1 AC conductors.

   The power supply cover is metal and grounds via the DIN rail.
3. Use ferruled leads to connect 12 V output to the transmitter PWR terminals.

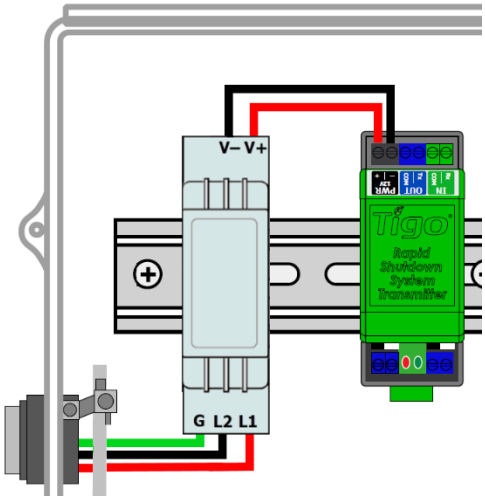

4. If connecting multiple transmitters, use parallel connections between all PWR terminals.

Ensure standard power supplies reliably output 12 V (±2%) 1 A current and commercial power supplies reliably output 12 V (±2%) 10 A current. Fusing is recommended. Do not use a 24 V power supply designed for the Tigo CCA.

Tigo power supplies meet ride-through interconnection requirements such as California's Electric Rule 21.

Connect a Core

You may connect one or two cores to a single transmitter. To connect a core to the transmitter:

1. Insert the core wire with a white ferrule into the transmitter white *Core 1* terminal. Torque to 0.5 Nm.

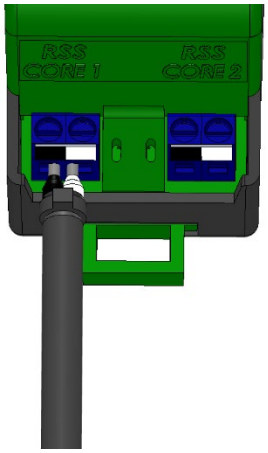

2. Insert the core wire with the black ferrule into the black terminal. Torque to 0.5 Nm.
3. Repeat the procedure at the *Core 2* output for two-core applications.

Do not modify or extend the wires between a transmitter and its core.

To route PV conductors:

1. Route PV conductors into the enclosure.

   Ensure PV conductors are installed in accordance with required practices listed in the PV Conductor Layout and RSS Signal Integrity section of this manual.

2. Pass up to ten negative conductors through a transmitter core.

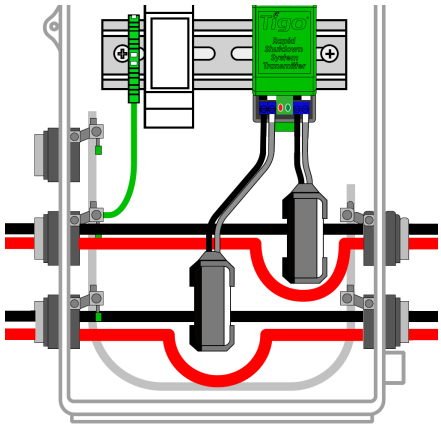

To PV array To inverter

The black side of the core must face the PV array.

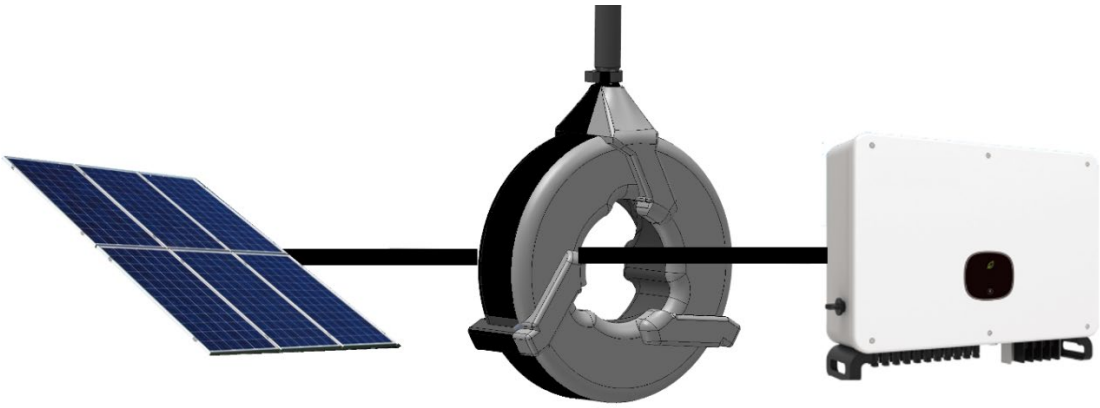

PV array Core Inverter

Connect Two Cores

Two cores may be used in series to amplify the signal from a single transmitter. This may be appropriate with home run strings between 300 m (1000 ft.) and 500 m (1650 ft.), if conductors have a large outside diameter (cannot fit 10 conductors in a single core), and in other special cases. Contact Tigo Sales Engineering for more information.

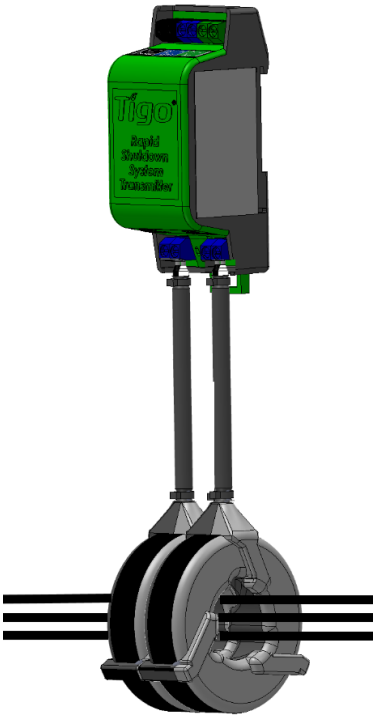

To PV array To inverter

Connect Signal Wiring

To connect signal wiring between multiple transmitters in a group, use 14 – 22 AWG wire. Torque all terminals to 0.4 Nm.

The first transmitter in a group is the "leader." Subsequent transmitters are "followers."

To connect signal wiring between multiple transmitters:

1. Turn off all AC power sources.
2. Connect the leader *OUT Tx* terminal to the follower *IN Rx* terminal.

   The leader *IN* terminals should always be unconnected.
3. Connect the leader *OUT COM* terminal to the follower #1 *IN COM* terminal.
4. Connect the follower *OUT Tx* terminal to the next follower *IN Rx* terminal.
5. Connect the follower *OUT COM* terminal to the next follower *IN COM* terminal.
6. Repeat the connections as needed.

   The last follower *OUT* terminals should always be unconnected.

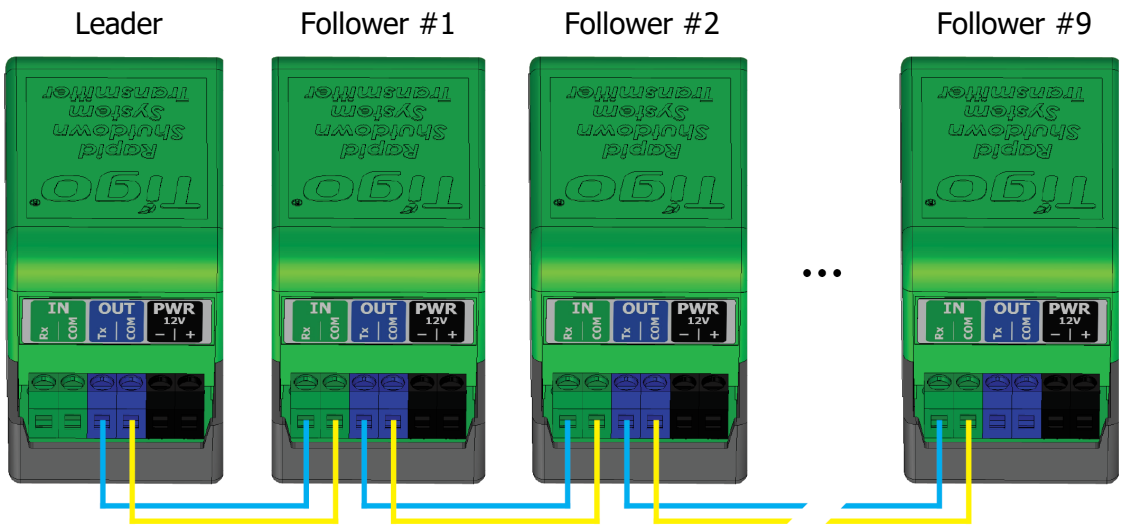

Check that signal (*Tx/Rx*) wires never connect to *COM* terminals.

Transmitter Status LEDs

If connected correctly:

- The leader transmitter displays a continuous red LED and a blinking green LED.
- Follower transmitter LEDs blink green simultaneously with no red.

Testing and Troubleshooting

Properly commissioning and optimizing site performance requires thorough, systematic testing. This section includes:

- Measurements Table Preparation
- Unpowered String Measurements – Safety Voltage
- Powered String Measurements
- Crosstalk Measurements
- RSS Signal Detection

Measurements Table Preparation

Prepare a table for recording all test measurements similar to the following:

RSS Measurements Table

Installation name:

Date:

Inverter #	MPPT #	String #	RSD Count	Solar Module Count	Expected Safety Voltage	Measured Safety Voltage	Voc	Current	Error?

Unpowered String Measurements – Safety Voltage

A TS4-A-F/2F connected to one or two solar modules produces 0.6 V when there are no keep-alive signals. This is referred to as a safety voltage because a string will never exceed 30 V, which is safe for humans. The expected safety voltage of a string of TS4s is:

<number of TS4-A-F/2Fs in the string> x 0.6 V

Test Safety Voltages

Before testing, make sure each inverter, MPPT, and physical string is properly labeled to match their "As Built" plan numbers.

To test a string's safety voltage:

1. Power-off all transmitters using PLC.

   Programmatically disable any SMA transmitters per the SMA instruction manual.
2. Switch off each inverter's AC and DC sides.
3. Open or remove the fuse used for each string input to the inverter.

   If the inverter has no fuses, disconnect each string from the MPPT inputs for direct measurement.
4. Record the inverter #, MPPT #, string #, and expected safety voltage in the measurements table.
5. Measure and record the string's actual safety voltage in the measurements table.
6. Compare the recorded safety voltage to the expected safety voltage.

   The string's actual voltage should be within 1% of the expected safety voltage. If not, mark the table's *Error?* column.

Resolve Safety Voltage Errors

Resolve all errors marked in the table before proceeding to powered string measurements.

If the measured safety voltage doesn't match the expected voltage, make sure that:

- If the measured safety voltage is 0 V, the string's fuse is open: the TS4s must be unloaded to produce 0.6 V. Make sure all fuses of adjacent strings in the MPPT are open.
- All TS4 input cables are connected to solar modules and not strings.
- If using a TS4-A-2F with a single solar module, input #1 cables are connected to the module and input #2 cables are connected to each other.
- TS4 output cables are properly connected to each other.
- The string is properly crimped and connected to the first and last TS4s.

If the measured safety voltage exceeds the expected voltage:

- Make sure that all fuses in the MPPT are open to ensure that various string safety voltages are not connected in parallel with each other.
- If the safety voltage is >30 V, make sure that a solar module is not connected directly to a string without using a TS4.

Powered String Measurements

Resolve all unpowered string issues before powering up the rapid shutdown system and performing powered measurements. Powering on a miswired or defective system may damage equipment and invalidate MLPE and inverter warranties.

For powered string measurements, use a voltmeter rated for 1,000 V for commercial rooftop installations and a 1,500 V rating for commercial ground mount installations.

Measure Open Circuit Voltage (V_{OC})

Use V_{OC} measurements to check for reasonable operation. Irradiance and temperature greatly affect results. Measuring the V_{OC} of a solar module disconnected from a TS4 at the time of testing will be more accurate than using the module's V_{OC} rating from a datasheet. Taking the average module V_{OC} from a string of modules is also useful.

The expected V_{OC} of a string is:

<number of modules in the string> x <single module's V_{OC} measurement or rating>

To setup V_{OC} measurement:

1. Open all string fuses of all MPPTs for all inverters.

   If there are no fuses, ensure all strings are labeled and disconnect them from all inverters.

2. Turn on the DC side of an inverter.
3. Turn on the inverter's RSS transmitter(s) by activating the AC initiator or by turning on the AC side of the inverter.

   Inverters will not draw current from an MPPT for the first few minutes after initiating operation.

4. If the inverter begins power production, restart the inverter's AC side until all V_{OC} measurements are complete.

   The open circuit string voltage (V_{OC}) can be measured only before the inverter starts producing power.

To measure string V_{OC}:

1. If fused, close one string fuse per MPPT and measure the string V_{OC} on the fuse terminal block.

   If non-fused, connect a Y-branch connector to the MPPT and measure the string V_{OC} at the unoccupied Y-branch input.

   Measure voltage with the negative voltmeter probe attached to the negative string terminal to check polarity.
2. Record the inverter #, MPPT #, string #, solar module count, and measured V_{OC}.

   Note whether the V_{OC} is negative or positive.
3. Turn off the AC side of the inverter to restart the power production delay.
4. Open the fuse that was closed and then close the next string fuse in the MPPT.
5. Turn on the AC side of the inverter.
6. Repeat this process until all inverter strings are measured and recorded.
7. Turn off the AC side of the inverter and repeat the process with the remaining inverters.

To determine problematic V_{OC} measurements:

1. Check for negative V_{OC} measurements and mark them as errors.
2. For each inverter, compare the measurements of strings that have the same number of solar modules.

   If strings have different solar module counts, determine the V_{OC} per module and multiply that by the typical number of solar module counts.
3. Taking into account different temperature and light conditions when the strings were measured, identify strings that have significantly different measurements and mark them as errors.

   Examining one inverter at a time limits time and temperature differences between string V_{OC} measurements.

Resolve V_{OC} Errors

1. If V_{OC} is 0 V, make sure the fuse has not blown and is closed.
2. If the V_{OC} measurement is negative, cut the connectors off the home run and re-crimp with the opposite polarity.
3. If the V_{OC} is higher than expected:
   - Make sure all other strings connected to the MPPT have open fuses or are disconnected so that a string's V_{OC} is isolated from parallel strings.
   - Physically count the solar modules in the string and verify they match the As Built plan. Update the plan if needed.

4. If V_{OC} is lower than expected:
    1. Check for proper TS4-to-module connections.
    2. If using a TS4-A-2F with a single solar module, ensure input #1 cables are connected to the module and input #2 cables are connected to each other.
    3. Test and replace each TS4 as needed.

    Improperly connected TS4s that have been powered on may be damaged. Refer to the Help Center Testing Methods for Tigo Flex MLPE Systems article for details.

Test Current Direction

Measure and resolve all V_{OC} errors before proceeding with current measurements. V_{OC} polarity must be correct before measuring current direction.

Test if all strings have the same current polarity. Reversed current may indicate improper wiring, damaged TS4s, mismatched solar modules, poor RSS signal strength, crosstalk, etc.

To test current direction:

1. Turn off the inverter's AC and DC sides and power-off any transmitters using PLC.
2. Close all string fuses.
3. Switch on the AC and DC sides to the inverter and power-up the transmitter.
4. Wait for the inverter to start producing power.
5. Clamp an amp/current meter on a positive home run string with the display facing away from the inverter.

   Make sure the current meter is clamped consistently with the same orientation for each string.
6. Measure and record the measured current in the measurement table.

   Note if the current is positive or negative.
7. When all measurements are complete, switch off the AC and DC sides of the inverter.

Measurements should all be similar in polarity and magnitude. If 5 strings show 10 A and one shows 5 A, mark this as an error. If a string shows a negative current, mark this as a current polarity error.

Resolve Current Direction Errors

1. Ensure only one RSS transmitter is producing an RSS signal by turning off all other transmitters.

   If this remedies the problem, make sure positive and negative string conductors are within 2.54 cm (1 in.) of each other. A home run conductor must be adjacent TS4 output cables as they are daisy-chained together.

2. Using a handheld temperature gun, measure the temperature of a TS4 that is close to a nearby string that does not have reverse current.
3.
4. Using this temperature as a baseline, measure the temperature of each TS4 in the string with reverse current.
5. Replace any TS4s that have a significantly higher temperature.
6. Using the RSS Signal Detector, check for a signal at each TS4.

   If absent:

   - Make sure the transmitter voltage is 12 V.
   - Check the polarity of the cores.
   - If the home run length is greater than 300 m and less than 500 m, use two cores.
   - Make sure positive and negative string conductors are within 2.54 cm (1 in.) of each other. A home run conductor must be adjacent TS4 output cables as they are daisy-chained together.

Crosstalk Measurements

Crosstalk can interfere with the keep-alive signals received by a TS4-A-F/2F. Crosstalk should always be addressed to minimize the risk of substantial power loss, especially if one or more transmitters on an installation aren't synchronized with the others. For more information about this kind of interference, refer to Appendix A – Crosstalk.

The effects of crosstalk will differ throughout various times of the day. If inverter monitoring shows abrupt power fluctuations, this is likely a symptom of crosstalk.

You may test for crosstalk in parallel with V_{OC} tests.

Test for Crosstalk

To test for crosstalk with transmitters directly powered by the inverter:

1. Power-off all RSS transmitters, close all DC fuses (if used), and turn on the DC side of all inverters.

   This will power-off all RSS transmitters. In the absence of crosstalk, TS4s will produce a safety voltage that is shorted out to 0 V by the inverter.
2. Power-on one of the RSS transmitters.
3. Check the MPPT voltage (either V_{OC} or V_{MP}) for strings that should have an RSS signal to verify proper operation.

   It can take several minutes before an inverter scans the MPPT and begins producing power.

4. To speed up the process, check the inverter's power production.
    - If it is 0 kW, move to the next inverter.
    - If it is >0 kW, look for the MPPTs producing power and then narrow the search to individual string power production by measuring V_{MP}.

    Time must be given for inverters to scan their MPPTs. It's preferable to do this test when the solar panels can produce enough current for the inverter to produce power.
5. Measure the voltage of each MPPT in inverters with unpowered transmitters.

    If there is a measurable voltage, mark the source and destination inverter #s and MPPT #s as experiencing crosstalk in the error column of the measurement table.
6. Switch off the AC side of the inverter along with its RSS transmitter and then switch on the AC side of the next inverter in the sequence along with its associated RSS transmitter.

    Make sure that only one inverter has the AC side and transmitter on at a time.
7. Repeat the process until all strings are tested.

To test for crosstalk with transmitters powered independently of the inverter:

1. Turn on the AC side of all site inverters, close all DC fuses (if used), and turn on the DC side of all inverters.
2. Turn on a single transmitter for the first inverter.
3. Check the MPPT voltages (either Voc or V_{MP}) for strings that should have an RSS signal to verify proper operation.
4. It can take several minutes before an inverter scans the MPPT and begins producing power.
5. Measure the voltage of each MPPT in inverters with unpowered transmitters.

    If there is a measurable voltage, record the source and destination inverter #s, MPPT # as crosstalk in the error column of the measurement table. This can be done via a power production display, access point, or cloud-based website.
6. To speed up the process, check the power production of the inverter.

    If it is 0 kW, move to the next inverter. If it is >0 kW, look for the MPPTs producing power and then string power production.

    Note that time must be given for inverters to scan their MPPTs. It is preferable to do this test when the solar modules can produce enough current for the inverter to produce power.

    It is also possible for crosstalk from transmitter A to affect inverter B while transmitter B may not affect inverter A.
7. Power off the RSS transmitter and power up the next RSS transmitter in the sequence.

    Make sure only one transmitter is powered at time.

8. Repeat the process until all strings are tested.

Resolve Crosstalk Problems

1. Check that all RSS transmitter cores:
   - Have only the negative home run conductor passing through them.
   - Are properly aligned with the white side facing the inverter and the black side facing the array.
   - Have correct wire polarity with the white wire connecting to the white terminal.
2. Check that strings:
   - <300 m long have only one transmitter core driving them.
   - >300 m and <500 m long have two properly aligned cores.
   - No strings are longer than 500m.
3. Adjust the geometry of each string so that:
   - Positive and negative home run conductors are always within 2.54 cm (1in.) of each other. A home run conductor must be adjacent TS4 output cables as they are daisy-chained together.
   - Home run conductors do not form a large loop.
   - Conduits do not contain home runs from different transmitters.
   - Conductors powered by different transmitters are at least 200 mm (8 in). apart.
   - Excess home run wire is trimmed and not spooled or wound up into a pile.
4. If transmitter A is causing inverter B to produce power, reduce the input voltage of transmitter A. If the crosstalk disappears on inverter B, double check the signal strength of every TS4 associated with inverter A to make sure there are no issues with signal strength.

Resolve Transmitter Errors

RSS transmitters use Tigo Pure Signal™ technology to mitigate crosstalk by synchronizing RSS signals in a fashion that enhances signal strength.

Carefully check that all transmitters are connected correctly according to the Connect Signal Wiring section in this manual. If problems persist, visit the Tigo Help Center.

RSS Signal Detection

You can check the strength of RSS keep-alive signals with the Tigo RSS Signal Detector (Tigo Part #400-00900-00) that senses an RSS signal on a home run, at a transmitter core, or at a TS4.

To check for an RSS signal:

1. Turn on the detector.
2. Place the detector sensor area within 5 cm (2 in.) of a TS4.
    - If the detector senses a keep-alive signal at the TS4, the LED will change from blue to yellow and emit an audible alert.
    - If it detects no signal, the LED will remain blue and there will be no sound.

Commissioning Checklist

Before energizing a transmitter group, first ensure all of the following conditions are met:

- All solar modules are connected to a TS4-A-F/2F.
- The black sides of all RSS cores face the PV array.
- Only negative conductors run through an RSS core.
- PV conductor home run length is ≤300 m (985 ft.) with one core or between 300 m (985 ft.) and 500 m (1650 ft.) using two cores.
- Signal wires between multiple transmitters are between *OUT* and *IN* terminals on each transmitter and connections are secure.
- Power supplies are wired correctly.
- All conduit attachments are secure.
- Measured string safety voltage should be 0.6V x the number of TS4-A-F/2Fs in the string ±1% the total expected string safety voltage. If any string has greater or less than expected safety voltage, de-energize the system and correct the issue before continuing.
- The PVRSS label is within 914 mm (3 ft.) of the Tigo E-Stop switch or other rapid shutdown initiation device.
- There is a common system wide actuator/switch that turns off all inverters and all transmitters simultaneously.
- Any built-in inverter PLC transmitters that are not used by the Tigo RSS system must be disabled.

All transmitters in a group should be energized and de-energized at the same time. One way to do this is to install a single AC breaker that powers all the transmitter group power supplies.

Energize RSS Transmitters

For each transmitter group:

1. Turn on AC power to all transmitters and/or inverters in the group.
2. Verify transmitter LEDs:
    - The leader transmitter displays a continuous red LED and a blinking green LED.
    - Follower transmitter LEDs blink green simultaneously with no red.
3. Close all DC string fuses (if equipped).
4. Close all AC switches for inverters in the group.
5. Close all DC switches on inverters in the group.

De-Energize RSS Transmitters

For each transmitter group:

1. Turn off the AC breaker to transmitters and/or inverters in the group.
2. Turn off AC switches on each inverter in the group.
3. Wait at least 30 seconds for the inverters to discharge.
4. Open all DC switches on inverters in the group.
5. Open all DC string fuses (if equipped).

Partial Site Shutdown

To temporarily shut down a portion of a site for testing or maintenance:

1. Turn off all associated RSS transmitters.
2. Turn off the AC and DC sides of all inverters to be shut down.
3. Wait at least 30 sec.
4. Open all string fuses, if equipped, for all MPPTs of all affected inverters.
5. If no fuses exist, disconnect the negative MPPT input for each string of every affected inverter.

Specifications

Download comprehensive specifications for all Tigo products from the Tigoenergy.com Downloads (www.tigoenergy.com/downloads) page.

Warranty

Download comprehensive warranty information from the Tigoenergy.com Downloads (www.tigoenergy.com/downloads) page.

Support

If you have any questions about installing Tigo products, please contact a Tigo sales engineering team:

Australia	+61 413 251-081
China	+86 512 6587-4600
Europe WhatsApp (English, Italian, Spanish)	+39 342 67 92 285
Japan	+81 3 4567-6199
Middle East WhatsApp (English, Hebrew)	+972 50 687-8618
North America	+1 480 402-0802 ext. 4
South America	+55 21-991045050
Taiwan	+866 919 743-749

If an issue persists after following the troubleshooting steps listed in this manual, visit the Tigo Help Center. If you open a support ticket, include the following information:

- A summary of tests you've performed
- System name or ID, owner, address, and installer
- Serial number(s) of the affected MLPE/transmitters.
- Number of strings per inverter MPPT
- Number of modules per string
- Length of each string from the positive to the negative home run at the inverter
- If available, inverter production, current, and voltage graphs

If a TS4 or transmitter appears damaged, please take pictures of the unit showing damage and a legible serial number.

Appendix A – Crosstalk

What Is Crosstalk?

Crosstalk is a phenomenon that involves the unwanted transfer of signals between cables or wires. Crosstalk can cause issues in any PV system that uses power-line communication (PLC). TS4s rely on the absence of keep-alive signals sent by an RSS transmitter via PLC to initiate a rapid shutdown response. If the RSS signal is compromised by crosstalk, power production will be affected when certain TS4s miss the keep-alive signal and stop producing power. Or, a TS4 that should be shut off may be turned on by crosstalk.

What Causes Crosstalk?

Electrical signals that pass through wires, junctions, or hardware generate electromagnetic fields. These fields can create and/or are susceptible to electromagnetic interference (EMI) from other signal-emitting sources. This type of interference can either amplify or nullify an RSS signal.

If crosstalk is present, it will come and go at various times during power production. The chances of crosstalk increase with the number of installed RSS transmitters at a solar installation.

There are three different kinds of crosstalk:

- Inductive – Separate, competing home runs are very close to each other and their respective magnetic fields induce a current in the adjacent home run. The length of the home run affects the crosstalk exposure. Two home runs spaced 3 cm apart for 1 m have far less effect than the same home runs running for 100 m with 3 cm spacing.
- Capacitive – Separate home runs are farther away from each other, and their respective electric fields induce a changing voltage in their adjacent home run. This is generally not as significant as inductive crosstalk.
- Radio frequency (RF) – If a string's home run forms a large loop, it becomes an effective transmitting and receiving antenna. This can cause crosstalk over larger distances. This kind of crosstalk is significant, yet it is also the easiest to mitigate.