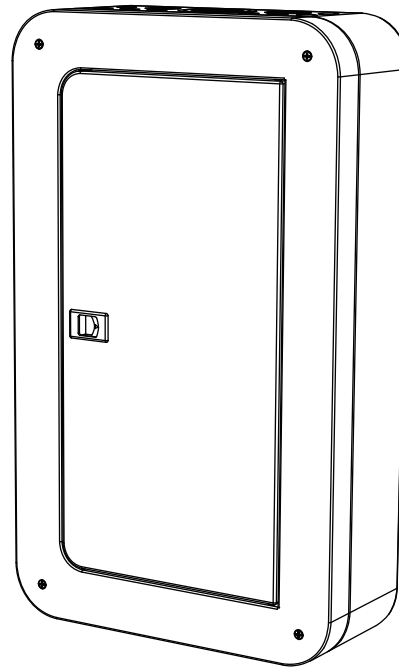

Sub Panel

Please read this manual before use and follow its guidance. Keep this manual for future reference.

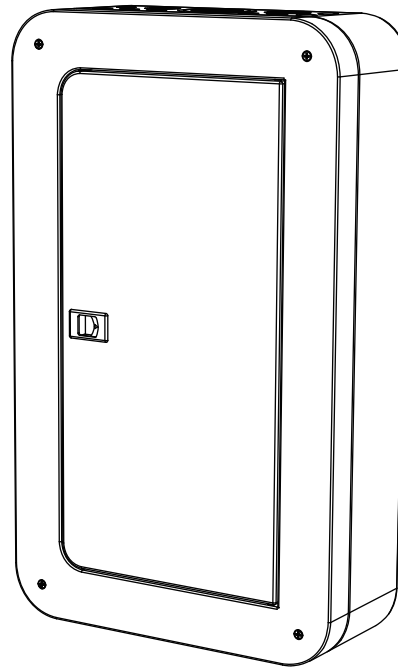

User Manual

Please read this manual before use and follow its guidance. Keep this manual for future reference.

CONTENTS

1. Introduction....01
1.1 Features....01
1.2 Application....01
1.3 In The Box....02
1.4 Quality Inspection....02
1.5 Sign....02
1.6 Safety....02
2. Installation....03
2.1 Preparation....03
2.2 Installation....03
2.3 Sub Panel Wiring....05
3. Connection....07
3.1 Single Connection....07
3.1.1 Single EP500....07
3.1.2 Single EP500 Pro....08
3.1.3 Single AC300....09
3.2 Split Phase Connection System....10
3.2.1 Dual EP500....10
3.2.2 Dual EP500 Pro....11
3.2.3 Dual AC300....12
4. Operation....14
4.1 Pass-through Function....14
4.2 Grounding Method....14
5. Specifications....16
6. Maintenance....16

1. Introduction

Thank you for purchasing Sub Panel by BLUETTI.

Sub Panel is designed and developed by BLUETTI for household power storage intended to supply electrical power to home appliances, RV, or remote locations where utility power is unavailable or in place of a utility due to a power outage. The Sub Panel is compatible with installations in the United States, Canada, Mexico, Japan, and other countries.

The EP500(or AC300) + Sub Panel power system adopts environmentally friendly and safe lithium batteries, provides users with a longer and more stable backup power supply.

User manual contains safety information to make you aware of hazards and risks associated with Sub Panel and how to avoid them, and instruction about installation, operation, maintenance. You must read these instructions thoroughly before starting or operating this equipment. Save this original instruction manual for future reference.

1.1 Features

- Indoor & Outdoor Installation.
- Compatible with BLUETTI AC300 and EP500/Pro.
- Support single and dual EP500/Pro or AC300 connected to generate power at 120V or 240V.
- Features inspection function. When the Sub Panel required to be overhauled, load on Sub Panel can be powered via the grid.
- Safety is ensured, Sub Panel will prevent overloads.

1.2 Application

For users with Single EP500/Pro or AC300, please connect the load to SubPanel.(Chapter 3.1)

For users with Dual EP500/Pro, or Dual AC300s, installation and enabling splitphase function. (Chapter 3.2)

1.3 In The Box

User must contact the dealer if the unit is defective.

	Unit	Quantity
A	Sub Panel	1
B	User Manual	1
C	Certification Card	1

Figure 1.1 Package List

1.4 Quality Inspection

Check the unit before shipping.

Content	Requirement
Appearance Inspection	Complete
Hardware	Complete
Accessories	Complete

Figure 1.2 Quality Test

1.5 Sign

	DANGER: The risk and severity of the shock depends on the voltage.
	WARNING: May cause personal or equipment damage.

1.6 Safety

User manual contains safety information to make you aware of hazards and risks associated with Sub Panel and how to avoid them, and instruction about installation, operation, maintenance.

It is essential to read and understand these instructions thoroughly before attempting to start or operate this equipment.

2. Installation

2.1 Preparation

2.1.1 Tool

Tools for installation of Sub Panel.

No.	Tool	Procedure
1	Drill	Preinstallation
2	Screw（4 PCS）	Installation
3	Wire strippers/Bolt cutter	Wire
4	Screw Driver(1 Set)	Wire

Figure 2.1.1 Tool Requirement

2.1.2 Wire

The wires connecting the home circuit to the Sub Panel are required as the chart below. The length and size of the cables are determined according to your needs and actual installation environment.

Wire	Size (recommendation)	Color (recommendation)
Hot（L1）	≥8 AWG	Black
Hot（L2）	≥8 AWG	Black
Neutral（N）	≥8 AWG	White
Earth（PE）	≥8 AWG	Green

⚠	WARNING: The AC cable should meet the requirements of National Electrical Standards.

2.2 Installation

The cable for connecting AC300 or EP500 series with Sub Panel contained in the package, please follow the instruction.

1) Take out the screw from the front cover of Sub Panel and remove it as **Figure 2.2.**

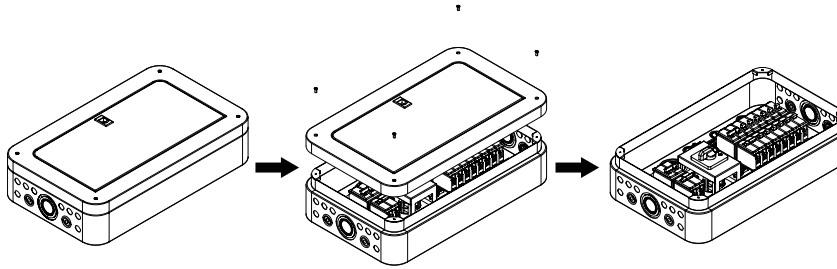

Figure 2.2 Remove Front Cover

2) Drill into the wall according to the size of Sub Panel.

Type A - Mounting: 4PCS Expansion Screw for concrete wall, tapping screw for wooden.

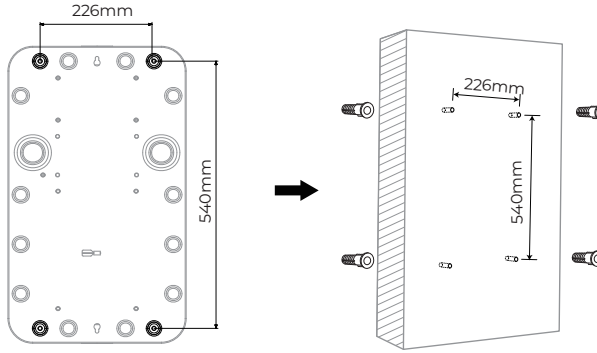

Figure 2.2.1 Drill & Mount

Type B - Hanging: 2PCS Expansion Screw for concrete wall, tapping screw for wooden.

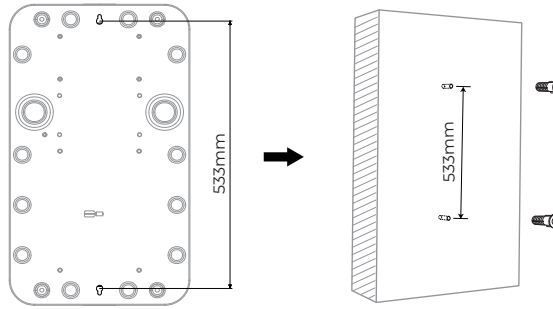

Figure 2.2.2 Drill & Mount

3) Mount the Sub Panel.

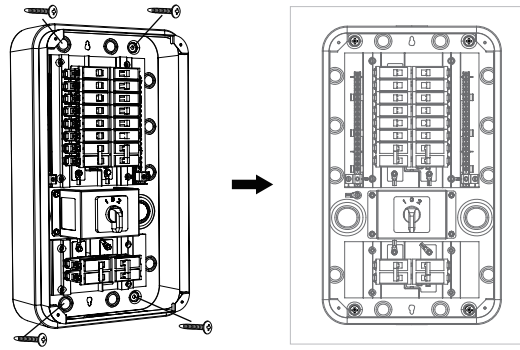

Figure 2.3.1 Drill & Mount

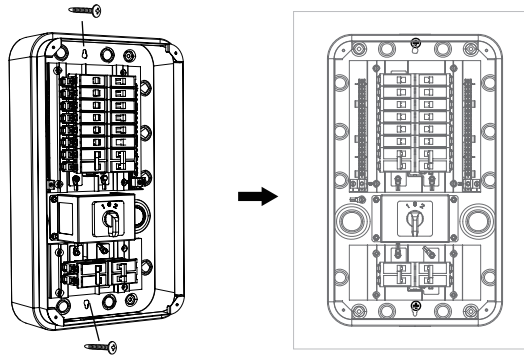

Figure 2.3.2 Drill & Mount

Mount the Sub Panel on wall from the pre-bored holes.

2.3 Sub Panel Wiring

Please follow the next steps after you have properly mounted the Sub Panel.

⚠	DANGER: Please use insulating tools during installation and maintenance.
⚠	DANGER: ●Turn off all breaker before installation, and twist the main switch to “0”. ●Confirm that your panel is no longer energized by utility power.
⚠	WARNING: The AC cable should meet or exceed the requirements of National Electrical Standards.

2.3.1 Wiring to Grid

1) Determine the length of the connecting wire according to the distance from the Sub Panel to the Main Panel.

2) Connect the Line Wires, Neutral Wires to the circuit breaker`s wiring bar on Sub Panel.

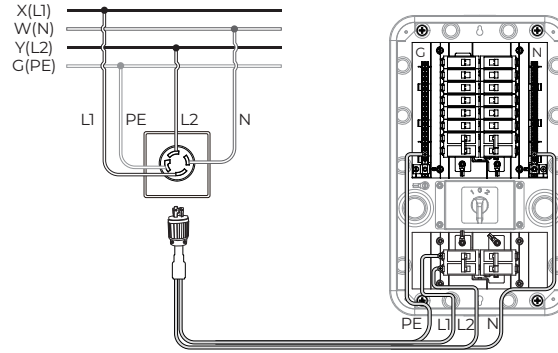

Figure 2.4 Sub Panel to utility power

2.3.2 Circuit of Load

1) Determine the length of the connecting wire according to the distance from the Sub Panel to the Main Panel.

2) Connect the Line Wire, Neutral Wire to the circuit breaker, bus bar on Sub Panel as **Figure 2.5.**

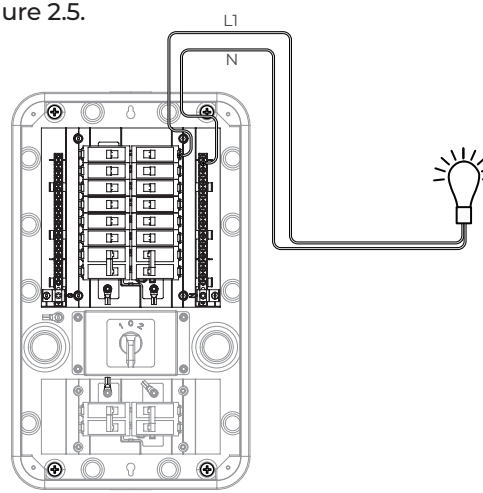

Figure 2.5 Connection of loads to Sub Panel

2.3.3 Wiring to BLUETTI Power Station

For better convenience, the connecting cables for EP500/Pro or AC300 (according to your order) are involved in the package of Sub Panel.
Please turn to **Chapter 3** for detailed installation information.
Check the connection as **(Circuit Diagram 1)**, put the front cover back.

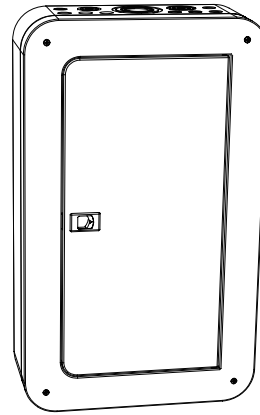

Figure 2.6 Front cover installed

3. Connection

Sub Panel supported Single or Dual BLUETTI Power Station connection.
Compatible Model: EP500/Pro, AC300.
Please contact to the dealer whether you order the Sub Panel Version is compatible with your power station.

⚠	DANGER: Read the user manual before installation.
⚠	WARNING: Ensure Sub Panel and circuit is turning off.

3.1 Single Connection

For single EP500/Pro or AC300 power station.
Grid: 2-wire input from grid at single-phase 100V or 120V is recommended.
The load capacity should exceed the Max Power of Input of Power Station.

3.1.1 Single EP500

Cable involved in the package of Sub Panel to connect with EP500.

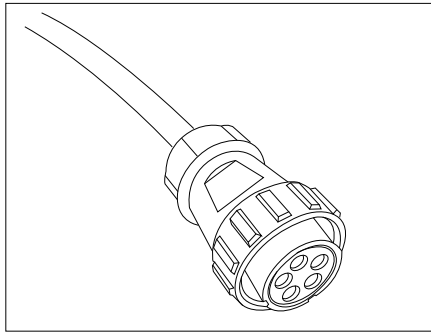

Figure 3.1 Input Plug
(For EP500)

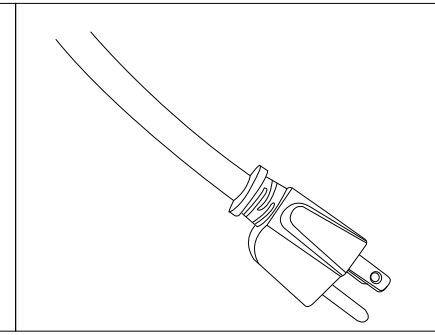

Figure 3.2 Off-grid Output Plug
(For EP500)

Connection of single EP500 with Sub Panel

Cable involved in the package of Sub Panel to connect with EP500 solar power station.

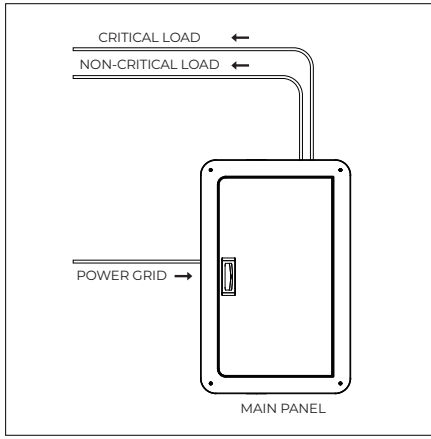

Figure 3.3 Main Panel

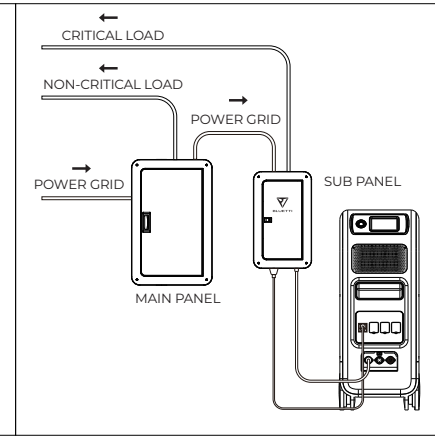

Figure 3.4 Sub Panel & single EP500

⚠	WARNING: The Input and Load circuit have to be connected to the same Line Wire.

3.1.2 Single EP500 Pro

Cable involved in the package of Sub Panel to connect with EP500Pro solar power station.

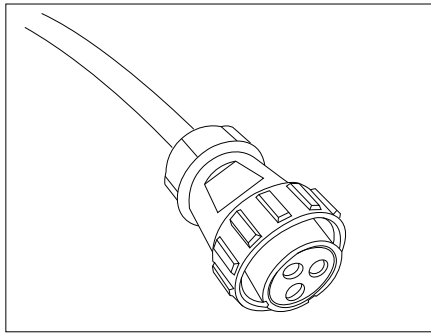

Figure 3.5 Input Plug
(For EP500Pro)

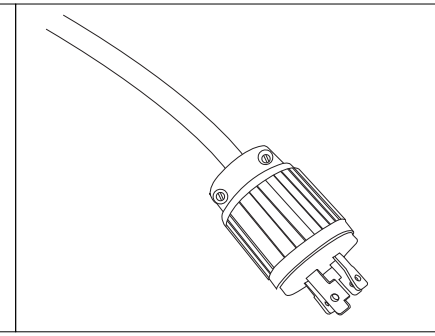

Figure 3.6 Off-grid Output Plug
(For EP500Pro)

Connection of single EP500Pro with Sub Panel

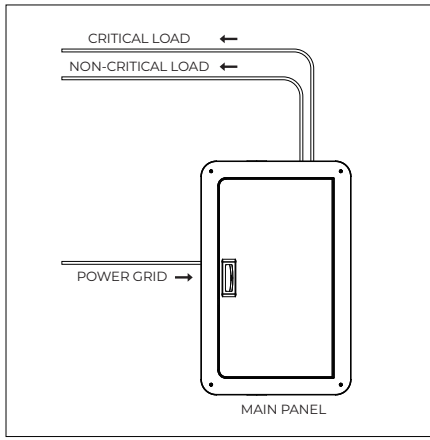

Figure 3.7 Main Panel

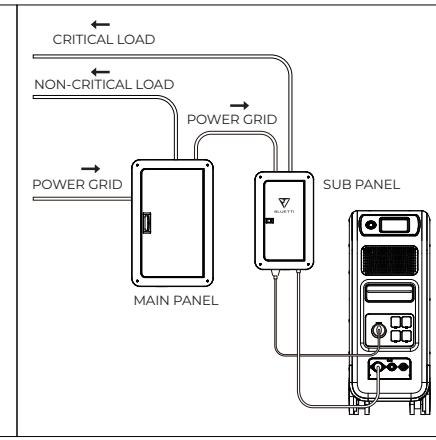

Figure 3.8 Sub Panel & single EP500Pro

⚠	**WARNING:** The Input and Load circuit have to be connected to the same Line Wire.

3.1.3 Single AC300

Cable involved in the package of Sub Panel to connect with AC300 solar power station.

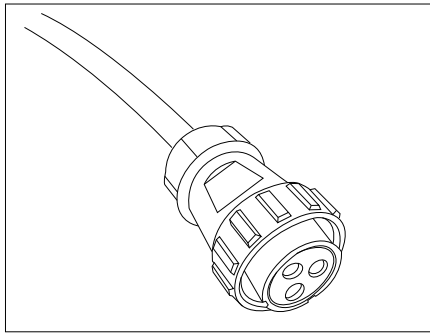

Figure 3.9 Input Plug
(For AC300)

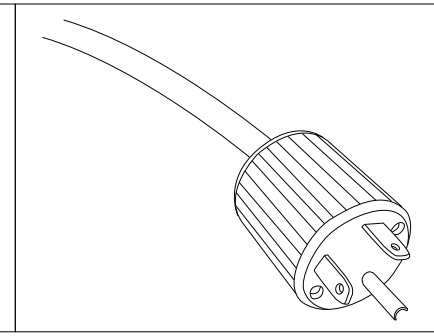

Figure 3.10 Off-grid Output Plug
(For AC300)

Connection of single AC300 with Sub Panel

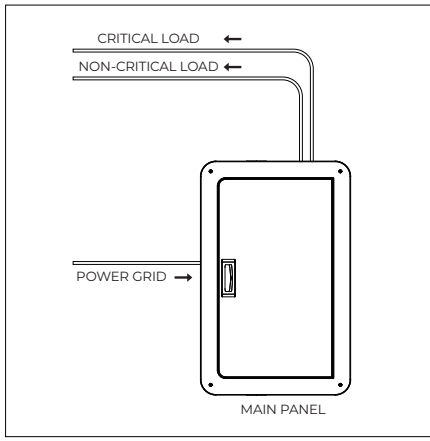

Figure 3.11 Main Panel

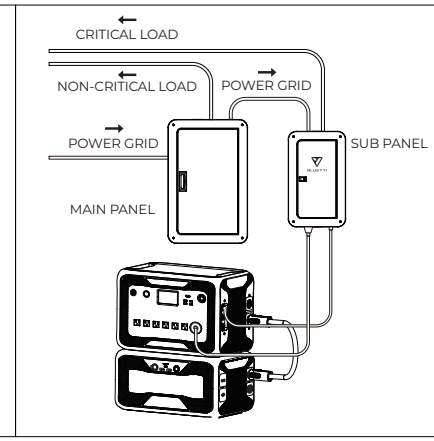

Figure 3.12 Sub Panel & single AC300

⚠	**WARNING:** The Input and Load circuit have to be connected to the same Line Wire.

3.2 Split Phase Connection System

For Dual EP500/Pro or Dual AC300 to enable Split Phase System.
Grid: 3-wire input from grid at single-phase 100V or 120V is recommended.
The load capacity should exceed the Grand Max Power of Input of Power Station.

3.2.1 Dual EP500

Cable involved in the package of Sub Panel to connect with Dual EP500 solar power station.

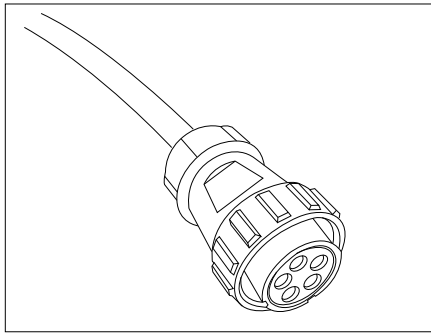

Figure 3.13 Input Plug
(For EP500)

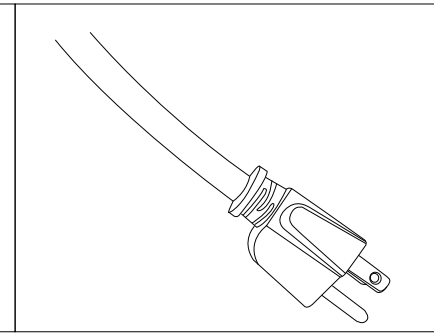

Figure 3.14 Off-grid Output Plug
(For EP500)

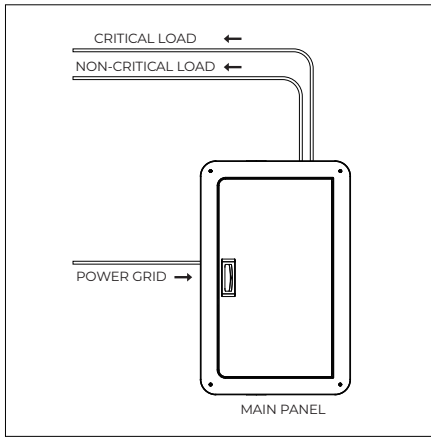

Figure 3.15 Main Panel

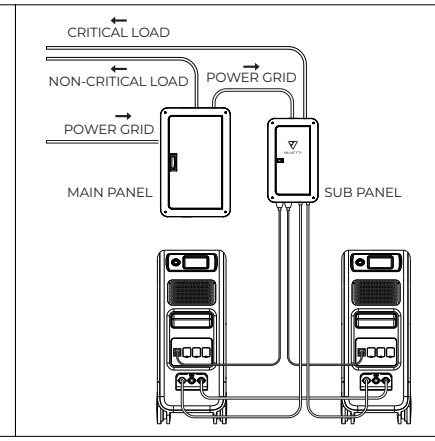

Figure 3.16 Sub Panel & Dual EP500

⚠	**WARNING:** The Input and Load circuit have to be connected to the same Line Wire.

3.2.2 Dual EP500 Pro

Cable involved in the package of Sub Panel to connect with Dual EP500-Pro solar power station.

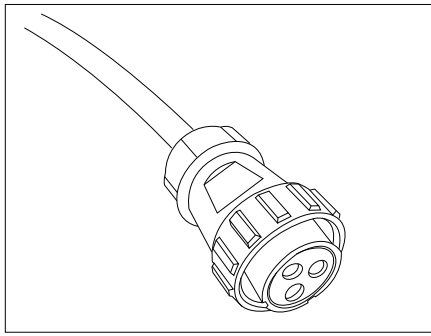

Figure 3.17 Input Plug
(For EP500Pro)

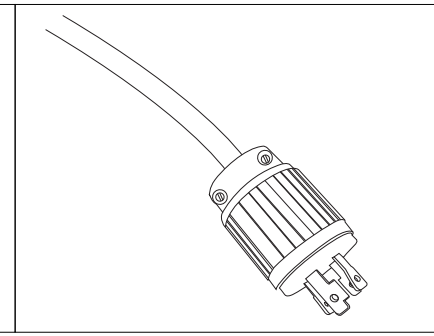

Figure 3.18 Off-grid Output Plug
(For EP500Pro)

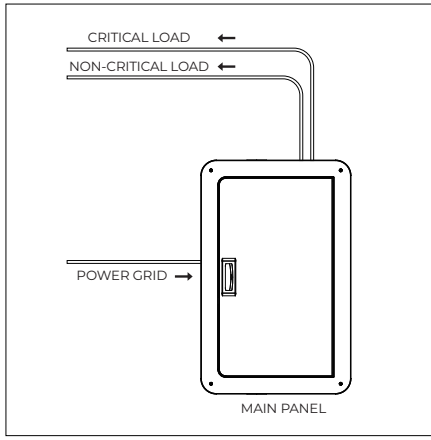

Figure 3.19 Main Panel Figure

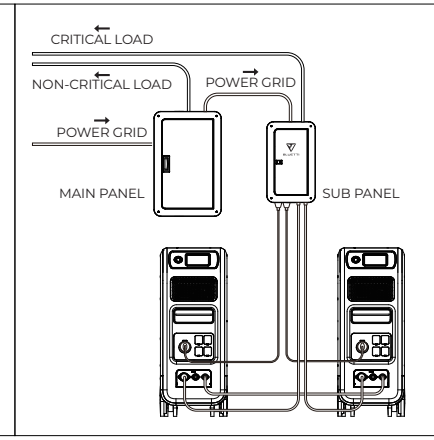

3.20 Sub Panel & Dual EP500Pro

⚠	WARNING: The Input and Load circuit have to be connected to the same Line Wire.

3.2.3 Dual AC300

Cable involved in the package of Sub Panel to connect with Dual AC300 solar power station.

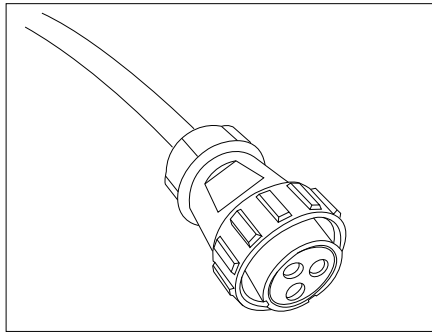

Figure 3.21 Input Plug
(For AC300)

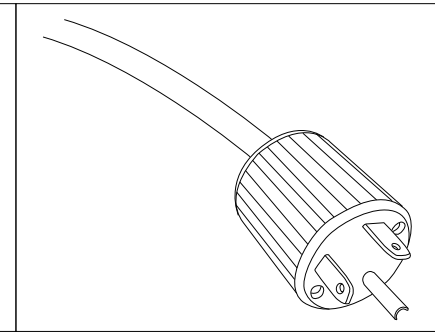

Figure 3.22 Off-grid Output Plug
(For AC300)

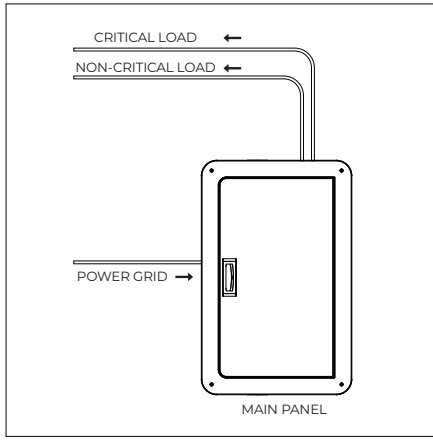

Figure 3.23 Main Panel

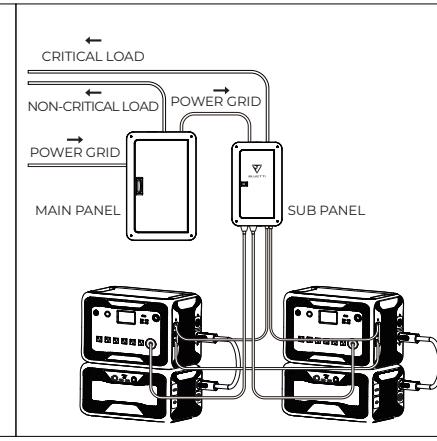

Figure 3.24 Sub Panel & Dual AC300

⚠	WARNING: The Input and Load circuit have to be connected to the same Line Wire.

4. Operation

Sub Panel supports manual bypass conversion function for maintenance, When you want to remove the EP500/Pro, AC300 Power Station from the Sub Panel, please tweak the rotary switch on Sub Panel to “2” **(Figure 4.3)** to maintenance then disconnect the connecting cable on Power Station,-household load will be powered directly by the utility power.

4.1 Pass-through Function

Rotary Switch Status:

“0”: **Disconnect.** Loads on Sub Panel are disconnect from both the utility power and Power Station. **(Figure 4.1)**

“1”: **Connected.** Sub Panel functions are all enabled. **(Figure 4.2)**

“2”: **Grid power supply.**The grid power supply status bit is directly supplied by the grid household load, which can complete the charging function for matching products.**(Figure 4.3)**

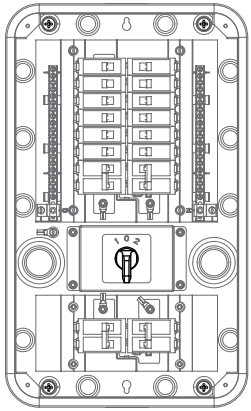

Figure 4.1
Disconnect

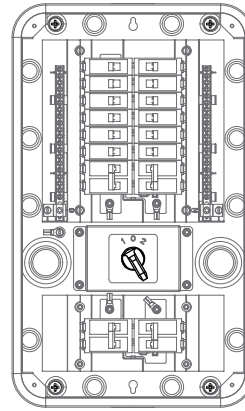

Figure 4.2
Machine power

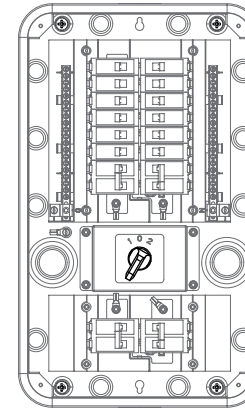

Figure 4.3
Grid power supply

4.2 Grounding Method

TFLOATING NEUTRAL: When Sub Panel is connecting with BLUETTI Power Station only(Disconnected with Main Panel): AC300, EP500 and EP500Pro, the N and PE Wire of the Input Port and Output Port of Power Station are not connected in Sub Panel directly, the distribution system`s neutral conductor will “float”, which means they are floating neutral.

BONDED NEUTRAL: Connecting the Sub Panel to BLUETTI Power Station

will not switch the floating neutral to bonded neutral. If you want to convert the Sub Panel to bonded neutral, please connect the Sub Panel with Main Panel, or follow the instruction to connect the Neutral bus-bar to PE.

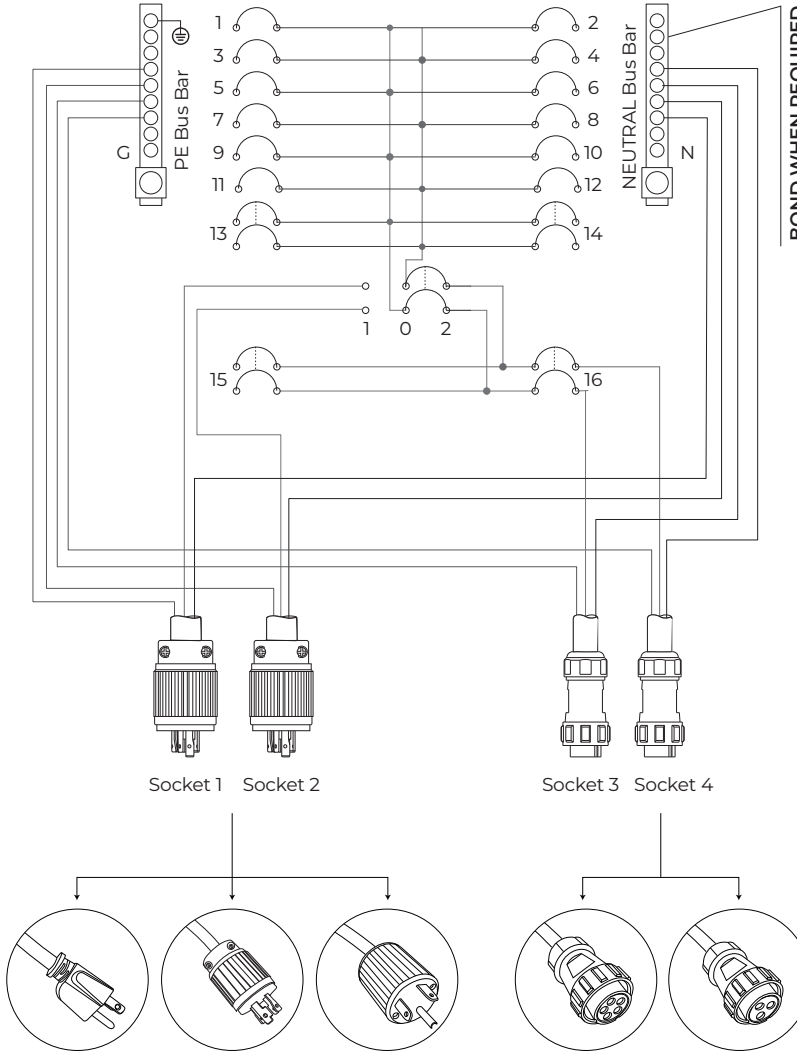

5. Specifications

Specifications	
Working Temperature	0°C～45°C/32～113°F
Humidify	10%～90%
Altitude	<2000m
Dimension（L*W*H）	360*140*600mm/14.17*5.51*23.62in
Weight	17KG/37.4lbs

6. Maintenance

Please follow the recommendations below for regular maintenance of the Sub Panel:

Check the wiring of each part of the system regularly whether the connection is stable.

Cut off the power immediately if it is loose. Please tighten it after powering off.

Regularly check the components for issues of vibration, abnormal sound or smell, etc.

Clean exterior cover of Sub Panel regularly.

Regularly check whether the wires of each part integrated in Sub Panel, damaged wires should be replaced immediately.

Please contact the dealer if the issues are not able to solve, detailed record of the problems will help.

Copyright
BLUETTIPOWER.INC

Declaration

Our company will not bear all responsibilities if the damage is caused by improper operation on the product.

Our company shall not be liable for any damage caused by force majeure such as fire, typhoon, flood, earthquake or the user's intentional negligence, misuse or other abnormal conditions.

Some changes may not be explicitly noticed, such as appearance or specifications due to the exterior material and hardware improvement.

Version
A 2.1 Version.
Date: July 2021

EU REP

Company: POWEROAK GmbH
Address: Lindwurmstr. 114, 80337 München Germany
Mail: logi@bluetti.de

UK REP

Company: POWEROAK ENERGY UK CO.,LTD
Address: Suite 108 Chase Business Center 39-41
Chase Side London United Kingdom N14 5BP
Mail:poweroak.eu@bluetti.com

P/N:17.0303.0391-00A0